COUPE A-A

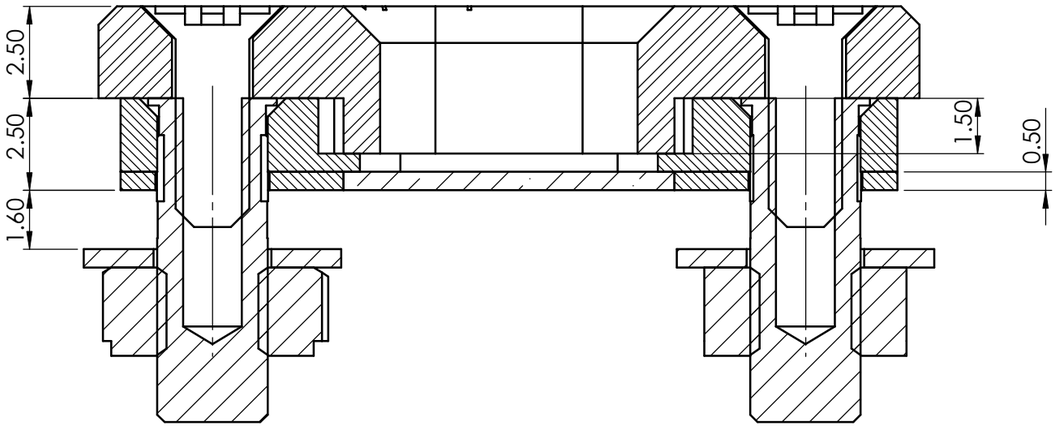

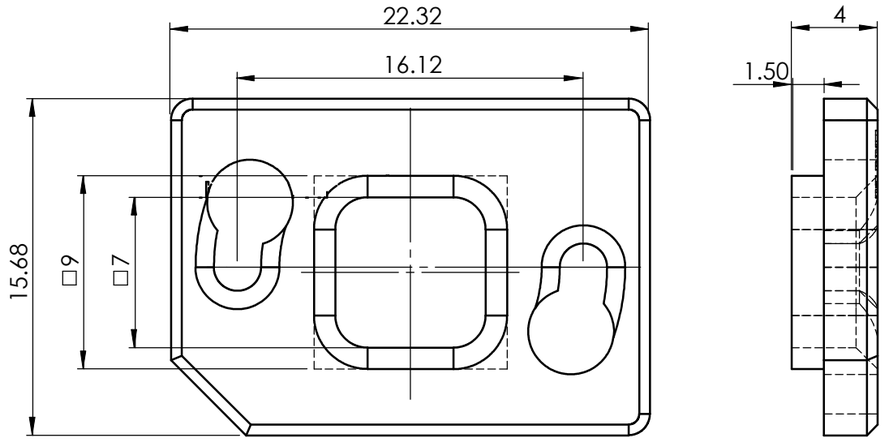

RETENTION FRAME

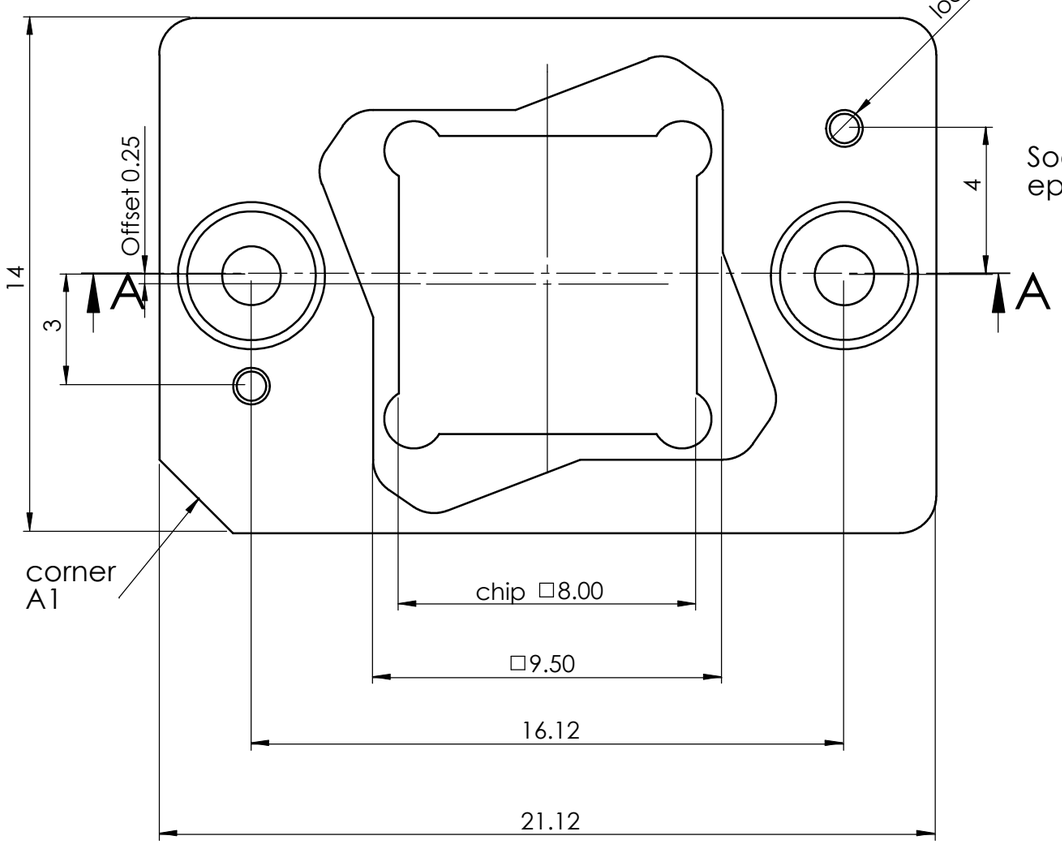

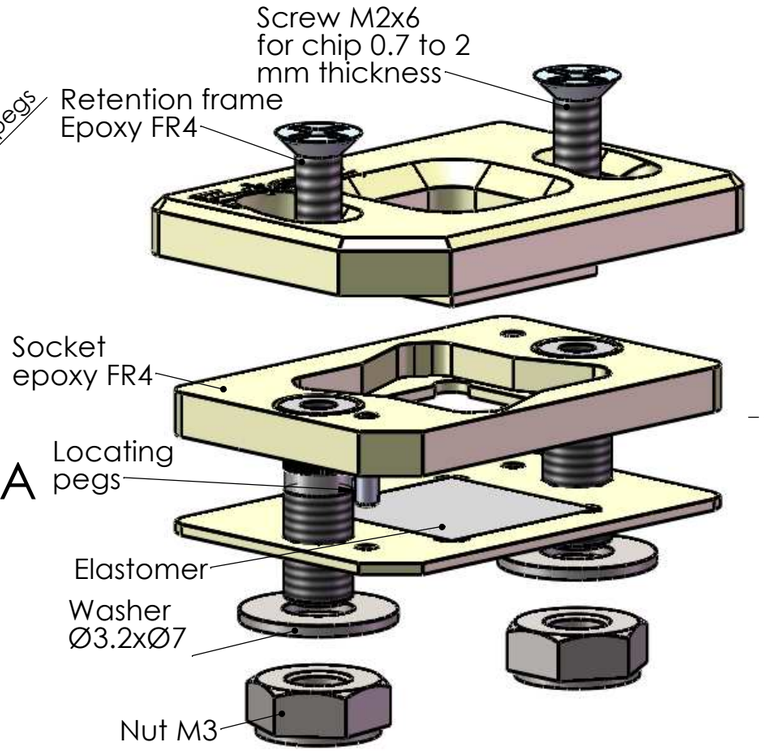

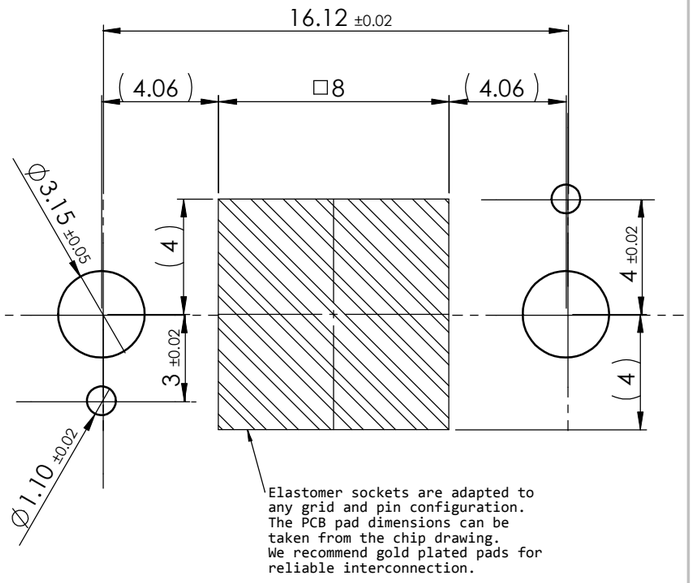

PCB LAYOUT

IMPORTANT NOTE
PCB layout is symmetrical as drawn and does not emulate the socket dimensions

CAUTION SOCKET DIMENSIONS ONLY DO NOT USE FOR PCB LAYOUT

A3H	Scale 6:1	UNLESS OTHERWISE SPECIFIED: DIMENSIONS ARE IN MILLIMETERS GENERAL TOLERANCES ISO 2768m	ELW999-9991-08MI55L
patented	REV 0	modif:	**Remark:** QFN Twist Lock socket, Chip 8x8 code MI = TwistLock + Opentop Max
The information contained in this drawing is proprietary and shall not be reproduced or disclosed in whole or in part or used for any design or manufacture	NAME / DATE		**Order code**
	DRAWN	14.02.2011	**ELW8**
	REV'D	- -	Description: Elastomer
	CHK'D	- -	Socket for M-QFN 8x8mm
	APPV'D	14.02.2011	